UTTERMOST

Assembly Instructions

ITEM NO. 24251

Parts List

A	Table Top	1 pc	E	Washer	24 pcs
B	Table Leg	4 pcs	F	Lock Washer	24 pcs
C	Table Base	1 pc	G	Wrench	1 pc
D	Bolt	24 pcs			

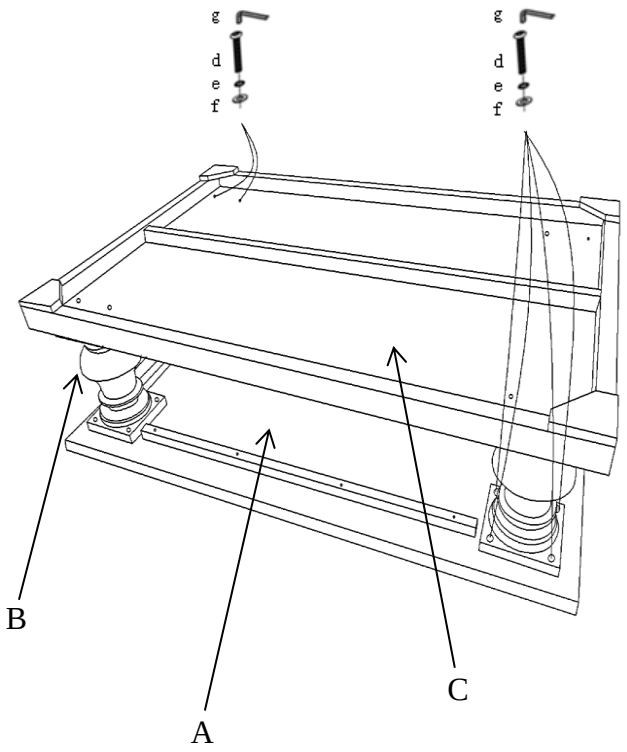

1. Take all parts carefully out of the carton. Place them on a soft, flat surface to be sure no parts are damaged or missing.
   <u>ASSEMBLY NOTE:</u> DO NOT FULLY TIGHTEN ANY BOLTS UNTIL STEP 4. This allows for some adjustment during assembly.

2. Place the Table Top upside down on a soft, flat surface. Attach all four Table Legs to the Table Top using Wrench (G), Bolt (D), Washer (E), Lock Washer (F), but leave all bolts loose.
   <u>NOTE:</u> Each leg needs to be attached so that the two visible grommets (facing upward on each leg) are aligned parallel with the longer side of the Table Top. This allows each leg to line up with the pre-drilled holes in the Table Base.

3. Once all Table Legs are attached to the Table Top, lay the Table Base upside down on the legs and attach using the same hardware from Step 2. Some adjustment will be required to help all pieces line up properly.

4. FULLY TIGHTEN all bolts and the table is ready to be turned upright. Assembly is complete.

   To clean the Stratford Coffee Table, wipe with a soft, dry cloth.

PO BOX 558/3325 GRASSY HILL RD. ROCKY MOUNT, VIRGINIA 24151
www.uttermost.com